CROWNLINK®

專業薄膜開關連接器第一品牌

ROHS

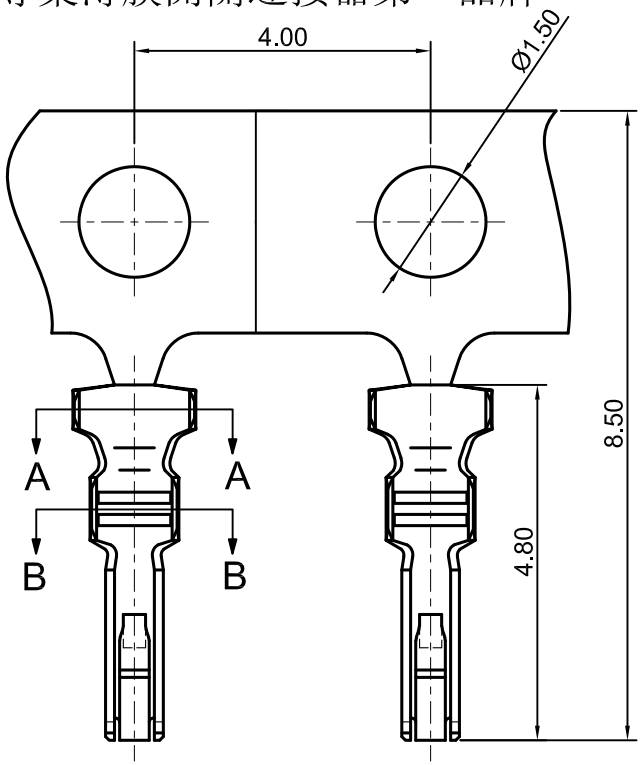

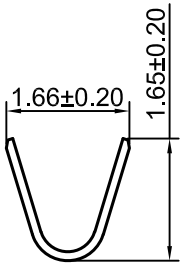

A-A SECTION

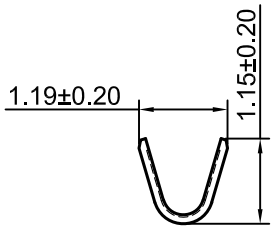

B-B SECTION

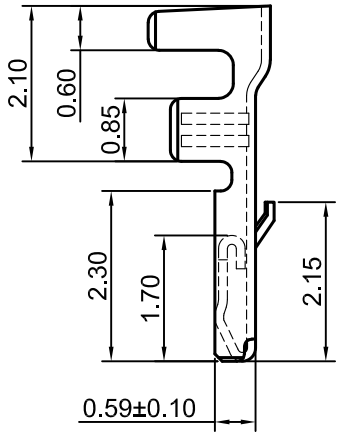

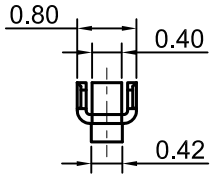

- FOR 1254HL SERIES HOUSING
- SPECIFICATIONS
  - VOLTAGE RATING：50V AC,DC
  - CURRENT RATING：1A AC,DC
  - WITHSTANDING VOLTAGE. 500V AC / MINUTE
  - INSULATION RESISTANCE：100 MΩ MIN
  - CONTACT RESISTANCE: 20mΩ MAX
  - TEMPERATURE RANGE：-25°C~+85°C
- APPLICABLE WIRE: AWG26#~32#
- PART NO.

1254- 20K - 0T - F H

- 1254: SERIES NO.
- 20K: 20K/REEL
- 0T: 0T:TIN PLATED.
- F: FEMALE
- H: MOLD NO.

REV/版本	MODIFIED CONTENT /變更內容	DRAWN/繪圖	DATE/日期

TOLERANCE RANGE/公差範圍

X. ±0.50	X.° ±3°
.X ±0.30	.X° ±2°
.XX ±0.20	.XX° ±1°
.XXX ±0.10	.XXX° ±0.5°

DRAWN/繪圖 JUDY	DATE/日期 2023.08.23
CHECK BY/審查 VIVIAN	DATE/日期 2023.08.23
APPROVED BY/核准 WENDY	DATE/日期 2023.08.23
PACKAGE/包裝	20,000PCS/REEL

CROWNLINK® THE LEADING MANUFACTURER OF FPC & FFC CONNECTOR,HOUSING AND DOME.

PRODUCT NAME/品名 4.00mm PITCH CONNECTOR FOR CABLE			
PART NO./料號 1254-20K-0T-FH	SCALE/比例 8:1	SIZE/圖號 A4	UNIT/單位 mm
MATERIAL/材質 PHOSPHOR BRONZE	ANGLE OF VIEW/視角	SHEET/頁碼 1 OF 1	REV/版本 A